REAR BUMPER

B0084–01

COMPONENTS

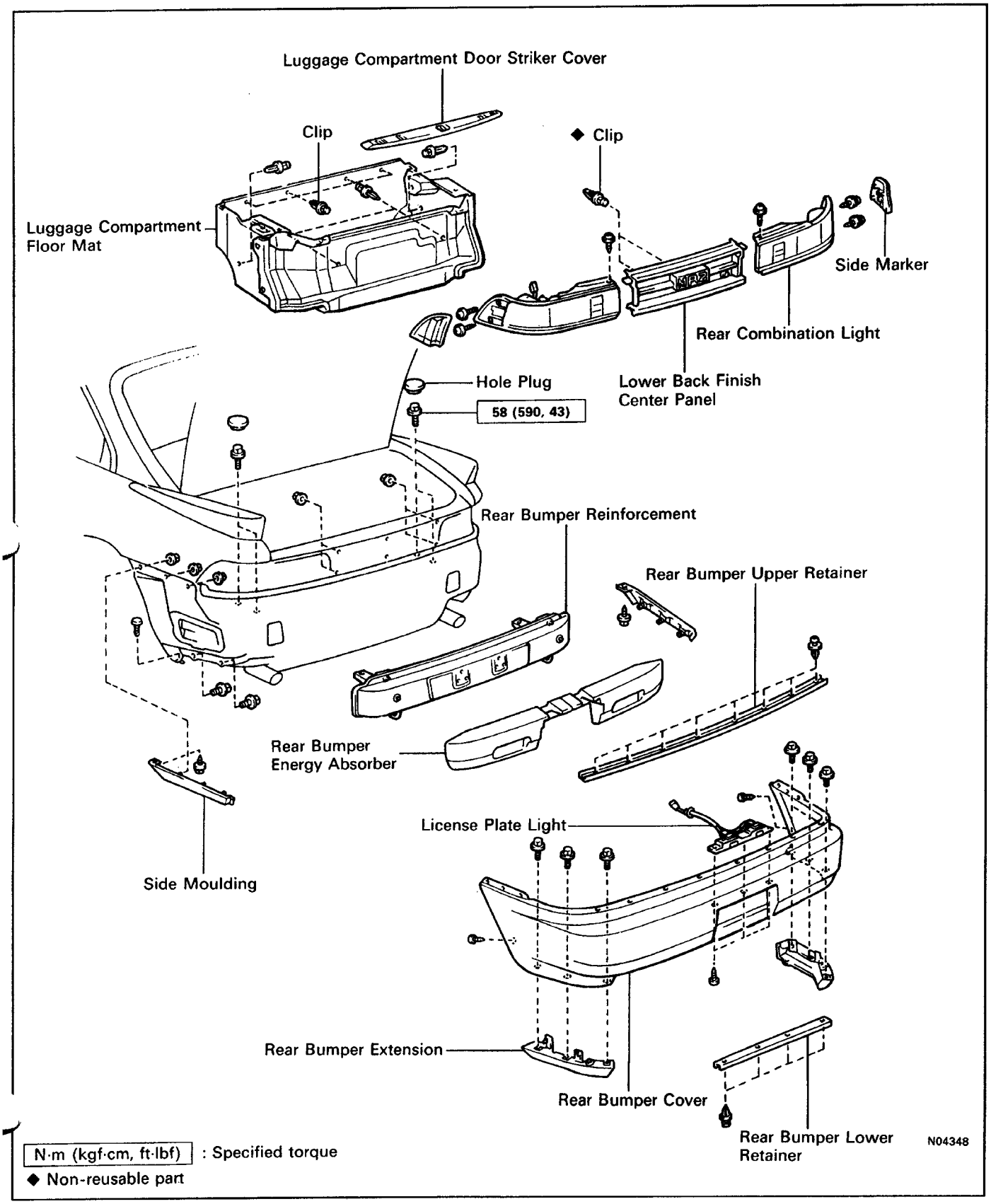

N·m (kgf·cm, ft·lbf) : Specified torque

◆ Non-reusable part